ECO NO.	DATE	REV.	REVISION RECORD	ANTR.	DR.BY
4751	04/10/01	A	REMOVED PREHEAT SWITCH. PREHEAT IS NOW PART OF IGNITION. ADDED TIME DELAY RELAY CIRCUIT.		JH
4794	12/14/01	B	#18 VIO WIRE WAS 365R Ω RESISTOR. ADDED NOTES.		TSM

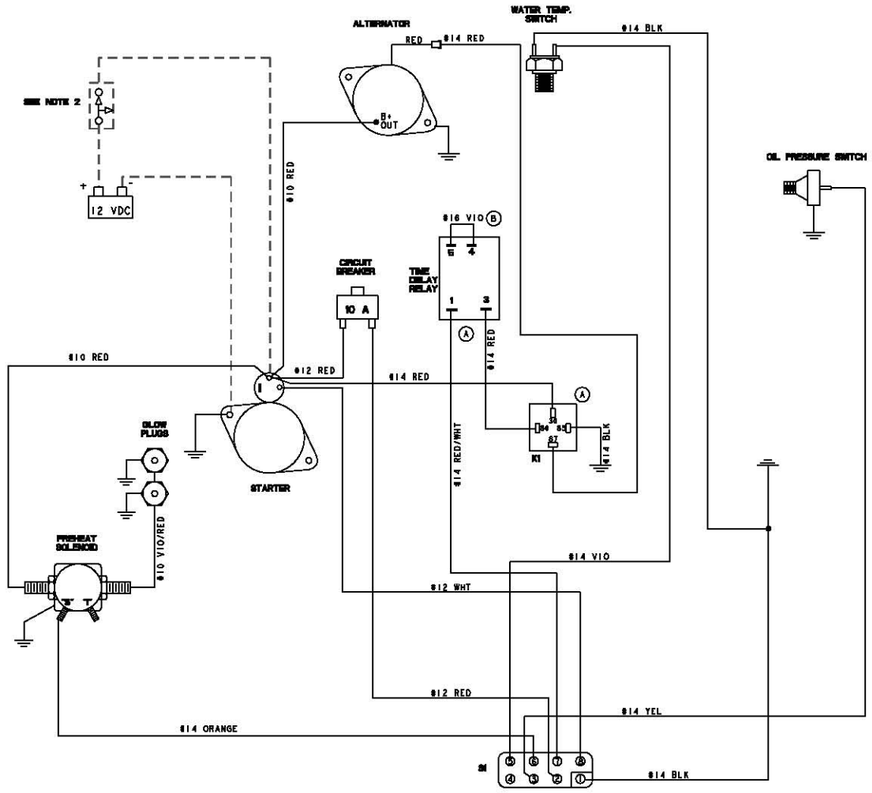

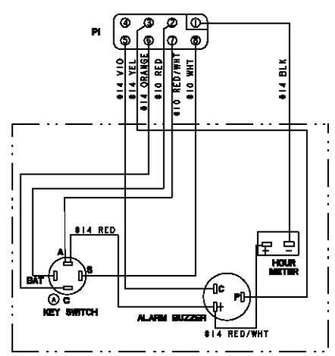

REMOTE PANEL

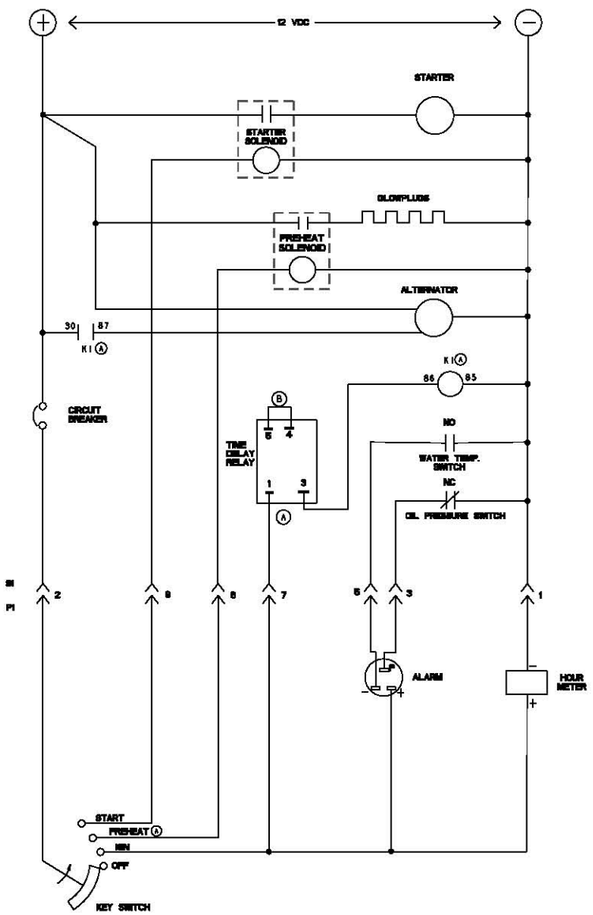

NOTES:

1. THIS PRODUCT IS PROTECTED BY A MANUAL RESET CIRCUIT BREAKER LOCATED NEAR THE STARTER. EXCESSIVE CURRENT WILL CAUSE THE BREAKER TO TRIP AND THE ENGINE WILL SHUT DOWN. THE BUILDER/OWNER MUST BE SURE THAT THE INSTRUMENT PANEL, WIRING, AND ENGINE ARE INSTALLED TO PREVENT CONTACT BETWEEN ELECTRICAL DEVICES AND SEAWATER.

2. AN ON-OFF SWITCH SHOULD BE INSTALLED BETWEEN THE BATTERY AND STARTER TO DISCONNECT THE BATTERY IN AN EMERGENCY AND WHEN LEAVING THE BOAT. A SWITCH WITH A CONTINUOUS RATING OF 175 AMPS. AT 12 VDC WILL SERVE THIS FUNCTION. THIS SWITCH SHOULD NOT BE USED TO MAKE OR BREAK THE CIRCUIT.

(B) 3. THE 7A-1 MODEL IS EQUIPPED WITH A TIME DELAY RELAY THAT PREVENTS THE EXCITATION OF THE ALTERNATOR DURING PREHEAT AND CRANKING. THE ALTERNATOR EXCITATION WILL OCCUR APPROX. 3MINS AFTER THE IGNITION KEY HAS BEEN TURNED ON.

(B) 4. THE 7A-1 IS EQUIPPED WITH AN AIR PREHEATER FOR COLD STARTS. TURN IGNITION KEY TO THE ON POSITION AND PUSH KEY IN AND HOLD FOR PREHEAT.

TOLERANCES (UNLESS OTHERWISE NOTED)	WESTERBEKE CORPORATION AVON MA. 02322	
INCHES / MILLIMETERS .XX ±.02 / X ±1 .XXX ±.005 / .X ±.1 .XXXX ±.03 / .XX ±.5 ANGLES ±1° FINISH 63	TITLE WIRING DIAGRAM/SCHEMATIC 7A-1, PROPULSION ENGINE	
DIMENSIONS INCHES MILLIMETERS (UNLESS APPLICABLE)	DRAWN BY CRISTA SANIBA APPROVED BY DATE 5/DEC/06 DATE MATERIAL:	
	SCALE NONE SHT. 1 OF 1	SIZE E DRAWING NUMBER 45593 REV. B